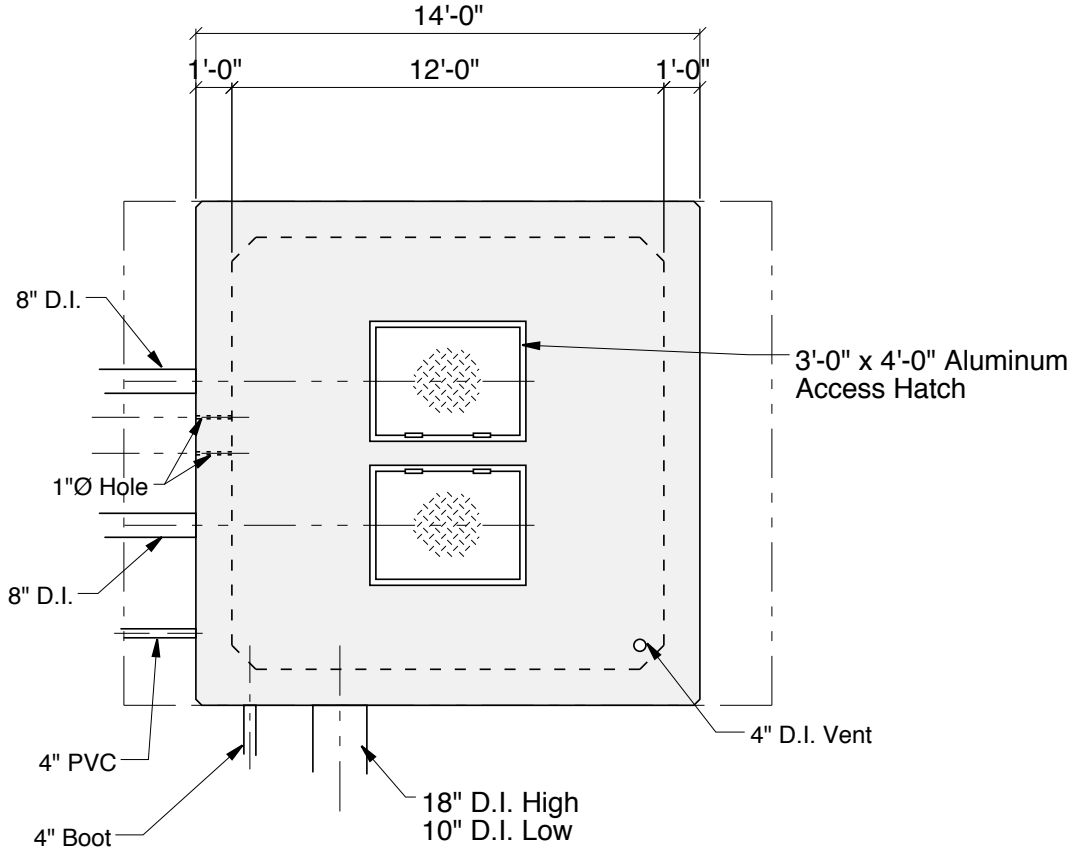

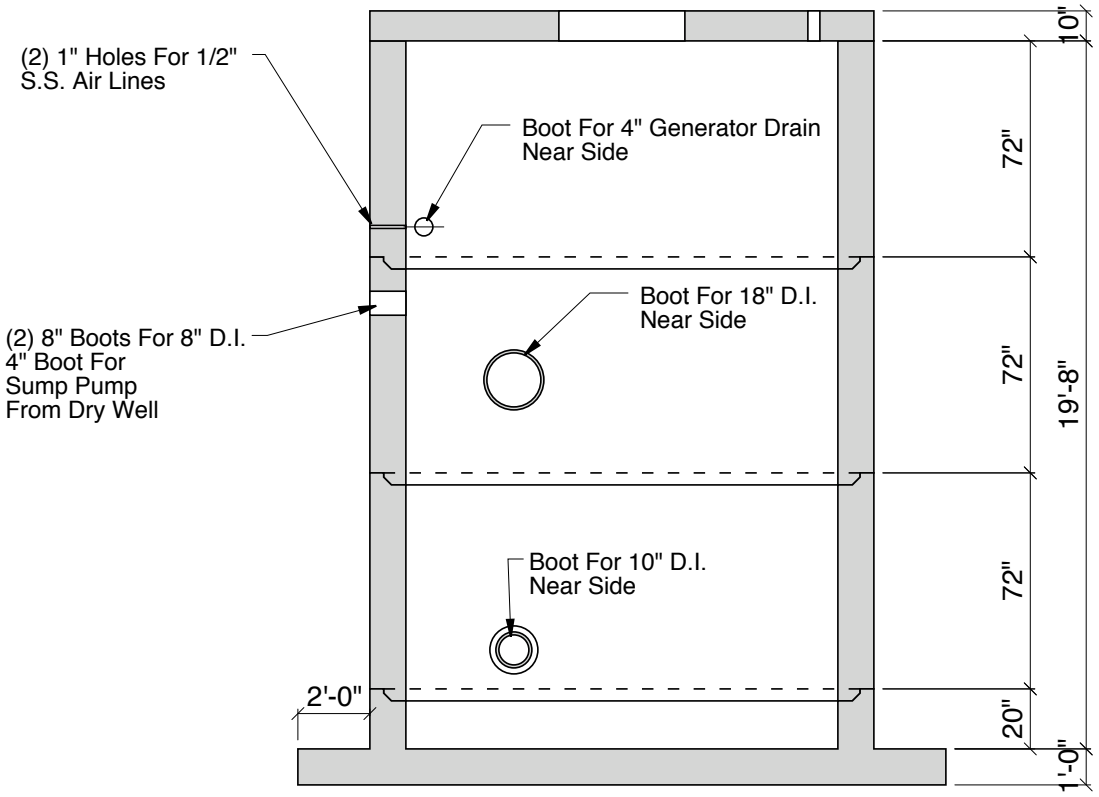

Box Pump Station

Crest Precast, Inc.
La Crescent, MN & Barneveld, WI